JOURNAL OF APPLIED ELECTROCHEMISTRY 18 (1988) 894–898

The effect of temperature on the water electrolysis reactions on nickel and nickel-based codeposits

A. C. FERREIRA, E. R. GONZALEZ, E. A. TICIANELLI, L. A. AVACA, B. MATVIENKO
Instituto de Física e Química de São Carlos, USP, C.P. 369, 13560 São Carlos SP, Brazil

Received 1 October 1987; revised 13 April 1988

Usually, an increase in the temperature of operation leads to a reduction in the voltage of operation of commercial water electrolyzers. The present work analyzes this effect in connection with the overpotential of the hydrogen and oxygen evolution reactions on electrodeposited nickel and some nickel-based codeposits which under normal operational conditions have shown good electrocatalytic characteristics. Results on pure nickel are also presented for comparison. A pressure chamber, adequate for electrochemical studies at high temperatures and pressures is described.

1. Introduction

Conventional water electrolyzers generally operate with concentrated alkaline solutions (25–30% KOH), at temperatures ranging from 70 to 90° C and 1 atm pressure. Working at current densities of the order of 150 mA cm^{-2} the practical voltage efficiency of the system is around 65–75%. The principal causes for the efficiency losses are the anodic and cathodic overpotentials [1–3] which depend strongly on electrode materials, temperature and pressure.

Although these electrochemical cells have been used industrially, for many decades, to generate purified hydrogen, there is still room for substantial improvements. In particular, the development of new catalysts for the electrodes and an increase of the temperature and pressure of operation constitute important technological challenges.

Presently, little is known about the kinetics and mechanisms of the hydrogen evolution reaction (HER) and the oxygen evolution reaction (OER) for temperatures above 90° C and pressures above 1 atm, but theory indicates that overpotentials can be reduced, in a magnitude that depends on the electrode materials used, as temperature increases. Miles *et al.* [4] studied the HER and OER at temperatures ranging from 70 to 268° C on pure nickel electrodes, using a specially designed pressure vessel. Their work shows that efficiencies of 100% (relative to the enthalpy of the reaction) can be obtained at 150° C. Appleby *et al.* [5] studied the HER and OER on several electrode materials in the temperature range 80–100° C and the results were extrapolated to 120° C. An increase in pressure (up to 40 atm for short periods of time) was found to be beneficial, particularly for porous electrodes. Previous work in this laboratory [6] has shown that some nickel-based alloys have good electrocatalytic properties for the HER for temperatures up to 80° C. Also, Ni–Co was found to have better mechanical properties than nickel deposits.

In this work the effect of temperature on the HER and OER was evaluated using electrodeposited nickel and codeposited nickel-based electrode materials. Additionally, the effect of pressure on the HER and OER was investigated but in the latter case it was not possible to obtain reproducible results. Thus, the effect of pressure will be discussed only with respect to the HER.

2. Experimental details

Experiments were carried out on a pressure vessel similar to that used by Miles *et al.* [4]. However, the vessel used here (Fig. 1) has some distinctive features that deserve description. The main body was constructed by welding a stainless steel pipe to a base of the same material. A concentric brass ring containing an external screw thread was welded to the exterior of the top of the body. On this was screwed a top cover made of stainless steel with an internal brass thread. In this way mounting and dismounting was facilitated considerably. Gas seals were made using Viton 0-rings and the top cover included channels for the circulation of refrigerating water to prevent heating damage to the 0-rings. The cover was provided with three entries for the electrodes and one for a thermocouple. It also accommodated the pressurizing system which consisted of a gas (nitrogen) entry, a measuring gauge and a safety valve. The pressure vessel was tested at 150 atm and the safety valve was set to operate at 60 atm.

The PTFE electrochemical cell (Fig. 2) was a 250 ml container with a cover which allowed the introduction of the three electrodes and the thermocouple. The reference was a dynamic hydrogen electrode [7] placed in a separate compartment as shown in Fig. 2. The auxiliary electrode was a 2 cm^2 area platinum sheet.

The HER was studied using the following electrode materials:

Pure nickel electrodes (Nickel wire Varian 99.99%)

Nickel–iron obtained by codeposition of nickel and iron on mild steel sheets, from a bath containing [8]

0021-891X/88 $03.00 + .12 © 1988 Chapman and Hall Ltd.

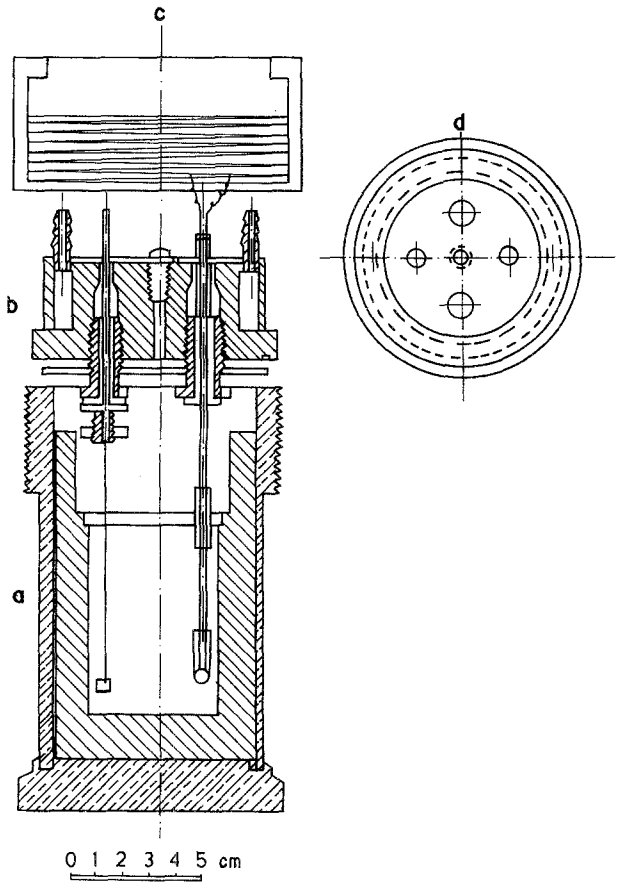

Fig. 1. Pressure vessel. (a) main body, (b) head, (c) top cover, (d) top view.

130 g l^{-1} $(CH_3COO)_2Ni.4H_2O$, 10 g l^{-1} $FeSO_4.7H_2O$ and 25 g l^{-1} H_3BO_3. The current density was 12 mA cm^{-2}, the temperature 45° C and the electrolysis time 30 min. The iron content of the deposit was 64%.

The OER was studied on the following materials:

Pure nickel (same as above)

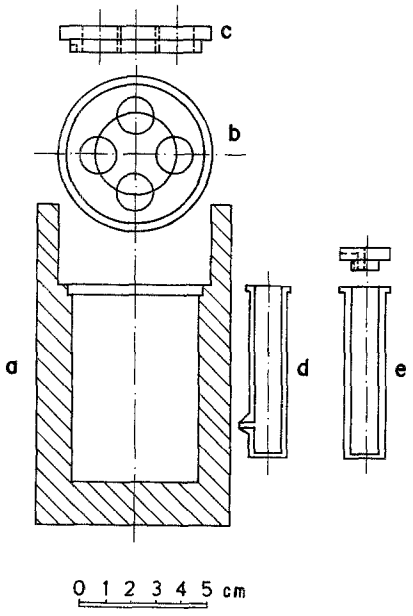

Fig. 2. PTFE Electrochemical Cell. (a) main body, (b) and (c) top and lateral view of cover, (d) reference compartment, (e) secondary electrode compartment.

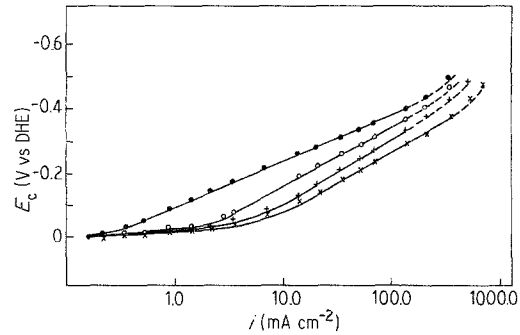

Fig. 3. Tafel plots for the HER on pure nickel in 50% KOH solutions at 2.5 atm and different temperatures (● 70° C, ○ 100° C, + 130° C, × 150° C).

Electrodeposited nickel. The electrodeposition was done from a Watts bath [9] on mild steel sheets.

Nickel–cobalt. This was obtained by codeposition of nickel and cobalt from a bath containing [9, 10] 307 g l^{-1} $NiSO_4$, 45 g l^{-1} NiCl and 15 g l^{-1} $CoSO_4$. The current density was 35 mA cm^{-2}, the temperature 60° C and the electrolysis time 50 min. The cobalt content of the deposit was 33%.

Some difficulties were found initially in the mounting of the working electrodes because of instability of the insulating materials in contact with the solution under the working conditions. After testing several materials and procedures, satisfactory mountings and isolation of the electrodes and the thermocouple were achieved with Hostaflon SE VP 5838 (Hoechst).

50% KOH solutions were prepared using p.a. salt (Merck) and triply distilled water. Solutions were pre-electrolyzed for 65 h at 1 A cm^{-2} between 2 cm^2 platinum electrodes in order to eliminate electroactive impurities, mainly iron [11].

Electrochemical studies were carried out by recording steady-state current–potential curves. The experiments were done galvanostatically and the curves converted into the corresponding Tafel plots.

3. Results and discussion

3.1. *Hydrogen evolution reaction*

Figure 3 shows the Tafel plots for the HER on pure nickel electrodes at 2.5 atm (gauge pressure) and for temperatures ranging from 70 to 150° C. From the figure it can be seen that there is a marked beneficial effect of an increase in temperature on the performance of the material. Similar results were obtained at 25 atm in the same temperature range, which indicates a small influence of the pressure.

The Tafel plots for the HER on Ni–Fe electrodes for the same experimental conditions are presented in Fig. 4. In comparison with the nickel electrode, the general effect of temperature and pressure is the same, although a smaller influence of temperature can be observed in this case. Similar results were obtained at 25 atm.

For temperatures above 80° C there seem to be two Tafel slopes for both nickel and nickel–iron. However,

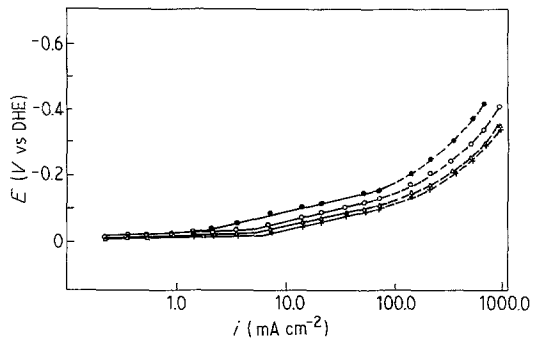

Fig. 4. Tafel plots for the HER on a Ni–Fe codeposit in 50% KOH solutions at 2.5 atm and different temperatures (● 70° C, ○ 100° C, △ 130° C, + 150° C).

the slope at low overpotentials is ill defined and will not be analyzed. For higher overpotentials the corresponding values of the slopes (b) and exchange current densities (i_0) at 2.5 atm, are presented in Table 1, together with values of the cathodic potentials (E_{100}) at a current density of 100 mA cm^{-2}. The values of i_0 were obtained by an extrapolation procedure [4, 5]. For a pressure of 25 atm the values of b, i_0 and E_{100} are presented in Table 2.

An examination of Tables 1 and 2 shows that the values of E_{100} for nickel electrodes decrease by about 115 mV when the temperature is increased from 70 to 150° C. For Ni–Fe electrodes the effect is less pronounced, the drop in E_{100} being about 60 mV. These results show that an increase in the working temperature of commercial electrolyzers can lead to a substantial reduction in electric energy and, consequently, in the operational cost of the system. On the other hand, an increase in pressure will not improve significantly the operational characteristics of the electrodes, although there may be advantages in producing hydrogen already under pressure plus some small reduction in the ohmic component of the cell voltage [5].

With respect to the materials compared here it is important to point out that in spite of the fact that an increase in temperature promotes a larger drop in potential for nickel electrodes, the Ni–Fe electrodes show, under all conditions, a better electrocatalytic activity, a fact that extends conclusions of previous work [12–14]. A mechanistic interpretation of the HER on both electrode materials can be done by comparing the electrochemical parameters with those

Table 1. Electrochemical parameters for the HER in 50% KOH solutions at different temperatures and 2.5 atm

T (° C)	b (mV decade^{-1})		i_0 (10^3 A cm^{-2})		E_{100} (V)	
	Ni	Ni–Fe	Ni	Ni–Fe	Ni	Ni–Fe
70	142	93	0.48	2.1	0.377	0.173
100	178	97	3.2	6.0	0.338	0.137
130	199	70	6.7	9.4	0.298	0.120
150	194	73	9.7	13.0	0.262	0.110

E_{100} = Potential corresponding to a c.d. of 100 mA cm^{-2}.

Table 2. Electrochemical parameters for the HER in 50% KOH solutions at different temperatures and 25 atm

T (° C)	b (mV decade^{-1})		i_0 (10^3 A cm^{-2})		E_{100} (V)	
	Ni	Ni–Fe	Ni	Ni–Fe	Ni	Ni–Fe
70	150	94	0.8	4.0	0.359	0.158
100	182	95	3.1	11.0	0.320	0.121
130	201	69	6.9	17.0	0.280	0.093
150	194	68	10.0	21.0	0.240	0.087

E_{100} = Potential corresponding to a c.d. of 100 mA cm^{-2}.

obtained theoretically for various mechanisms [15, 16] and those reported in similar studies [4, 5, 12, 14, 17, 18]. The value of the Tafel slope for nickel at 70° C and 2.5 atm (142 mV decade^{-1}) together with the fact that nickel presents a low hydrogen coverage [18] suggests a mechanism in which the first electron transfer (Volmer reaction)

$$H_2O + e^- = H_{ads} + OH^- \quad (1)$$

is the rate determining step. For higher temperatures, the values of the Tafel slopes suggest the same mechanism. Thus the decrease in cathodic potentials as the temperature increases should be associated with an increase in i_0, without changes in the mechanism.

For Ni–Fe electrodes at 70° C, a much smaller value of the Tafel slope was found (73 mV decade^{-1}). On this material the hydrogen coverage is reasonably high, which suggests a fast discharge followed by a rate determining step that could be either the Heyrovsky reaction or the Tafel recombination reaction under activated Temkin conditions. This conclusion was reached by considering the values of the Tafel slopes for the possible mechanisms of the reaction [15, 16]. Tafel slopes for higher temperatures suggest that there is no change in the mechanism so the observed results should be a consequence of higher values for the exchange current density. For this material, as well as for nickel, there seems to be no effect of pressure on the mechanism of the process.

The activation energy for the HER defined as

$$\Delta H^{\neq} = -R\left(\frac{\partial \ln i_0}{\partial(1/T)}\right) \quad (2)$$

was obtained from the corresponding Arrhenius plots. The values were 48 kJ mol^{-1} for nickel and 29 kJ mol^{-1} for Ni–Fe, showing clearly the better catalytic properties of the last material.

A comparison of the values presented here for pure nickel at 150° C with those reported by Miles *et al.* [4] shows reasonable good agreement except for the fact that somewhat lower Tafel slopes were observed in this work.

3.2. *Oxygen evolution reaction*

Figure 5 shows the Tafel plots for the OER on pure nickel at 2.5 atm and several temperatures. Similar results were obtained for electrodeposited nickel and

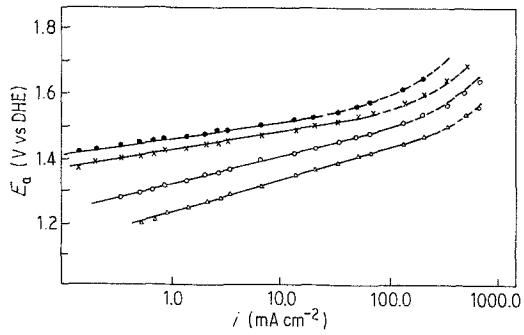

Fig. 5. Tafel plots for the OER on pure nickel in 50% KOH solutions at 2.5 atm and different temperatures (● 70° C, × 100° C, ○ 130° C, △ 150° C)

for Ni–Co codeposits. The electrochemical parameters b, i_0 and E_{100} for the three electrode materials are presented in Table 3.

The values of i_0 were obtained as described for the HER, using the reversible potentials for the OER reported in the literature [4, 19].

For the three electrode materials it can be seen that an increase in temperature from 70 to 150° C promotes a decrease of about 170 mV on the values of E_{100}. This is in agreement with previous observations on pure nickel over a wider temperature range [4]. The results in Table 3 show that the performance of the three electrode materials is equivalent. As expected, the kinetic parameters for the OER are determined in all cases by the nickel oxide layer present on the surface. This is revealed by the cyclic voltammetric behavior of Ni–Co codeposits and it is in agreement with the results reported for other nickel-based alloys [20]. Cost considerations in electrolyzer construction would obviously give preference to the electrodeposited materials and of these, the Ni–Co codeposit may be preferred because it presents greater mechanical strength than electrodeposited nickel.

From a mechanistic point of view, the results in Table 3 indicate that the path of the reaction is probably the same on the three electrode materials. The OER is in general less known that the HER and several mechanisms, compatible with the observed results, are possible [15, 21]. However, considering the more generally accepted mechanisms it seems reasonable to assume the following steps

$$M + HO^- = MOH + e^- \quad (3)$$

$$MOH + HO^- = MO + H_2O + e^- \quad (4)$$

$$2MO = O_2 + 2M \quad (5)$$

where M is an active site on the surface. Tafel slopes are higher than expected for the recombination step (Equation 5) to be rate determining. Thus, it appears that one of the electron transfer steps (Equations 3 or 4) is rate determining. Additionally, it can be observed in Table 3 that there is a large improvement in the kinetics between 100 and 130° C. In this temperature range a change in the transfer coefficient is also observed, suggesting that the RDS changes from Equaton 4 to Equation 3 as the temperature increases. These effects could be associated to modifications in the structure of the oxide layer. From the Arrhenius plots the values of the activation energy for the OER were 147 kJ mol^{-1} for pure nickel, 142 kJ mol^{-1} for electrodeposited nickel and 159 kJ mol^{-1} for Ni–Co codeposits, showing again similar characteristics for the three materials.

Meanwhile, for pure nickel the values of $\Delta H^{\neq}$ are twice as large as those found by Miles *et al.* [4]. This could be attributed to errors in the extrapolation procedures to obtain i_0 or to the nature and thickness of the oxides present at the electrode surface. This last effect, which is not yet thoroughly understood [22, 23], is also manifested in the large differences in the values of b and i_0 reported in the literature for nickel in alkaline solutions. Nevertheless, the results reported here for the OER at 150° C agree reasonably well with those reported previously for pure nickel under similar conditions except for the energy of activation. The classical mechanistic study presented here is a result of the interpretation of steady-state polarization curves. A more detailed study of these important electrode reactions will require the determination of real coverages as a function of potential and an interpretation of temperature effects on Tafel slopes [24].

The results presented here give further quantitative support to the accepted principle that an increase in temperature will significantly increase the efficiency of water electrolyzers. However, in practice, this will require the development of reasonably priced separators that can operate at higher temperatures than the asbestos or modified asbestos used today.

Table 3. Electrochemical parameters for the OER in 50% KOH solutions at different temperatures and 2.5 atm

T (° C)	b (mV decade^{-1})			i_0 (A cm^{-2})			E_{100} (V)		
	Ni	Ni(ed)	Ni–Co	Ni	Ni(ed)	Ni–Co	Ni	Ni(ed)	Ni–Co
70	48	47	41	6.0×10^{-8}	9.0×10^{-8}	5.4×10^{-8}	1.590	1.575	1.545
100	57	60	54	4.0×10^{-7}	8.4×10^{-7}	3.6×10^{-7}	1.550	1.540	1.518
130	85	76	80	4.2×10^{-5}	4.0×10^{-4}	7.8×10^{-5}	1.492	1.462	1.456
150	98	90	77	3.0×10^{-4}	5.6×10^{-4}	4.0×10^{-4}	1.432	1.392	1.373

E_{100} = Potential corresponding to a c.d. of 100 mA cm^{-2}.
Ni(ed) = Electrodeposited nickel.

References

[1] E. A. Chapman, *Chem Process Eng.* (1965) 387.
[2] D. H. Smith, in 'Industrial Electrochemical Process' (edited by A. T. Kuhn), Elsevier, Amsterdam (1971) p. 127.
[3] W. T. P. Lu and S. Srinivasan, Proc. International Conference on Alternative Energy Sources, Florida (edited by T. N. Veziroglu), Hemisphere, New York (1977) p. 3577.
[4] M. H. Miles, G. Kissel, W. T. P. Lu and S. Srinivasan, *J. Electrochem. Soc.* **123** (1976) 332.
[5] A. J. Appleby, G. Crepy and J. Jacquelin, *Int. J. Hydrogen Energy*, **3** (1978) 21.
[6] J. de Carvalho, G. Tremiliosi Filho, L. A. Avaca and E. R. Gonzalez, 'Hydrogen Energy Progress', Vol. VI (edited by T. N. Veziroglu, N. Getoff and P. Weinzierl), Pergamon, Oxford, 2 (1986) p. 250.
[7] A. J. Giner, *J. Electrochem. Soc.* **111** (1964) 376.
[8] D. Singh and V. B. Singh, *Indian J. Technol.* **13** (1975) 520.
[9] R. Brugger, in 'Praktiche Galvanotechnik', Eugen G. Leuze Verlag, FRG (1970).
[10] H. Silman, 'Chemical and Electroplated Finishes', Chapman and Hall, London (1961).
[11] L. A. Avaca, A. Carubelli and E. R. Gonzalez, 'Hydrogen Energy Progress' Vol. III (edited by T. N. Veziroglu, K. Fueki and T. Ohta), Pergamon, Oxford (1980) p. 127.
[12] E. R. Gonzalez, L. A. Avaca, A. Carubelli, A. A. Tanaka and G. Tremiliosi Filho, *Int. J. Hydrogen Energy* **4** (1984) 689.
[13] J. de Carvalho, G. Tremiliosi Filho, L. A. Avaca and E. R. Gonzalez, 'Hydrogen Energy Progress' Vol V, (edited by T. N. Veziroglu and J. B. Taylor), Pergamon, Oxford, (1984) p. 923.
[14] *Idem.*, 'Proc. of the Symposium on Electrode Materials and processes for Energy Conversion and Storage' (edited by S. Srinivasan, S. Wagner and H. Wroblowa), The Electrochemical Society, Pennington, NJ (1987).
[15] B. E. Conway and M. Salomon, *Electrochim. Acta* **9** (1964) 1599.
[16] L. B. Bicelli, *La Chim. e L'Industria*, **55** (1973) 792.
[17] J. O'M. Bockris and E. C. Potter, *J. Chem. Phys.* **20** (1952) 614.
[18] M. A. V. Devanathan and M. Selvanathan, *Trans. Faraday Soc.* **56** (1960) 1820.
[19] P. W. T. Lu, PhD Thesis, State University of New York (1976).
[20] P. W. T. Lu and S. Srinivasan, *J. Electrochem. Soc.* **125** (1978) 265.
[21] J. O'M. Bockris, *J. Chem. Phys.* **25** (1956) 817.
[22] V. I. Birss and A. Damjanovic, *J. Electrochem. Soc.* **134** (1987) 113.
[23] B. E. Conway and T. Liu, *J. Chem. Soc., Faraday Trans. 1.* **83** (1987) 1063.
[24] B. E. Conway, in 'Modern Aspects of Electrochemistry', Vol. 16 (edited by B. E. Conway, R. E. White and J. O'M. Bockris), Plenum, New York (1985) p. 103.